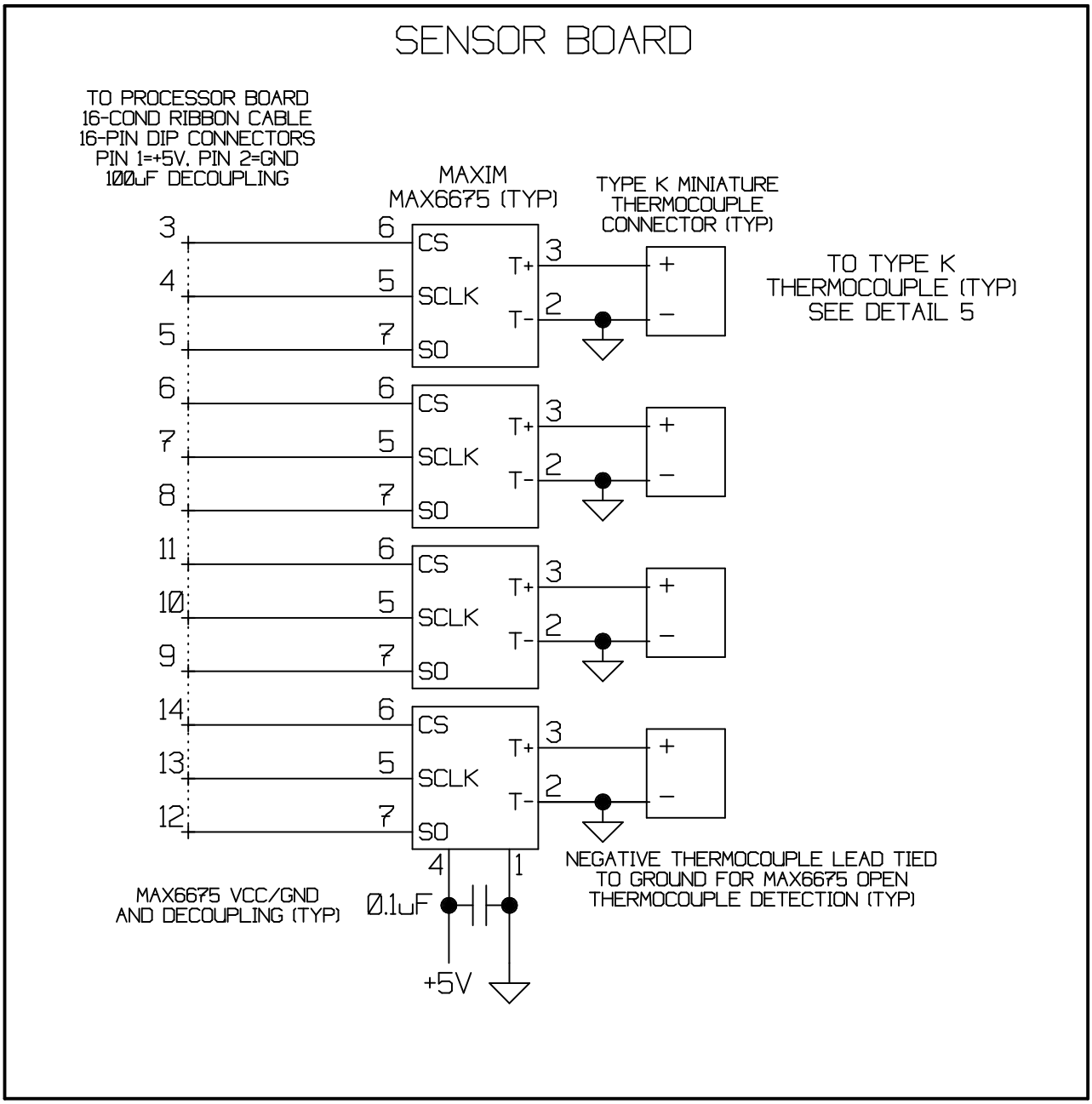
SENSOR BOARD
TO PROCESSOR BOARD
16-COND RIBBON CABLE
16-PIN DIP CONNECTORS
PIN 1=+5V. PIN 2=GND
100uF DECOUPLING
MAXIM
MAX6675 (TYP)
TYPE K MINIATURE
THERMOCOUPLE
CONNECTOR (TYP)
TO TYPE K
THERMOCOUPLE (TYP)
SEE DETAIL 5
CS
SCLK
SO
T+
T-
NEGATIVE THERMOCOUPLE LEAD TIED
TO GROUND FOR MAX6675 OPEN
THERMOCOUPLE DETECTION (TYP)
MAX6675 VCC/GND
AND DECOUPLING (TYP)
0.1uF
+5V